ITEM NO.	PART NUMBER	DESCRIPTION	QTY.
1	1-600	WIDESPREAD HOT AND COLD VALVES W/PLASTIC NUTS	1
1.1	1-109	WIDESPREAD VALVE COLD LAV 16PT	1
1.2	1-110	WIDESPREAD VALVE HOT LAV 16PT	1
2	3-046/00	POP-UP DRAIN ASSEMBLY (2-101, 2-102)	1
3	3-085/00	ASSY, BIDET SPRAYER	1
4	3-160/00	BIDET DIVERTER, COMPLETE	1
5	3-192	POP-UP ROD BIDET, BASIC	1
6	3-442/00	ASSY, TUBULAR CROSS HANDLE, BASIC	2

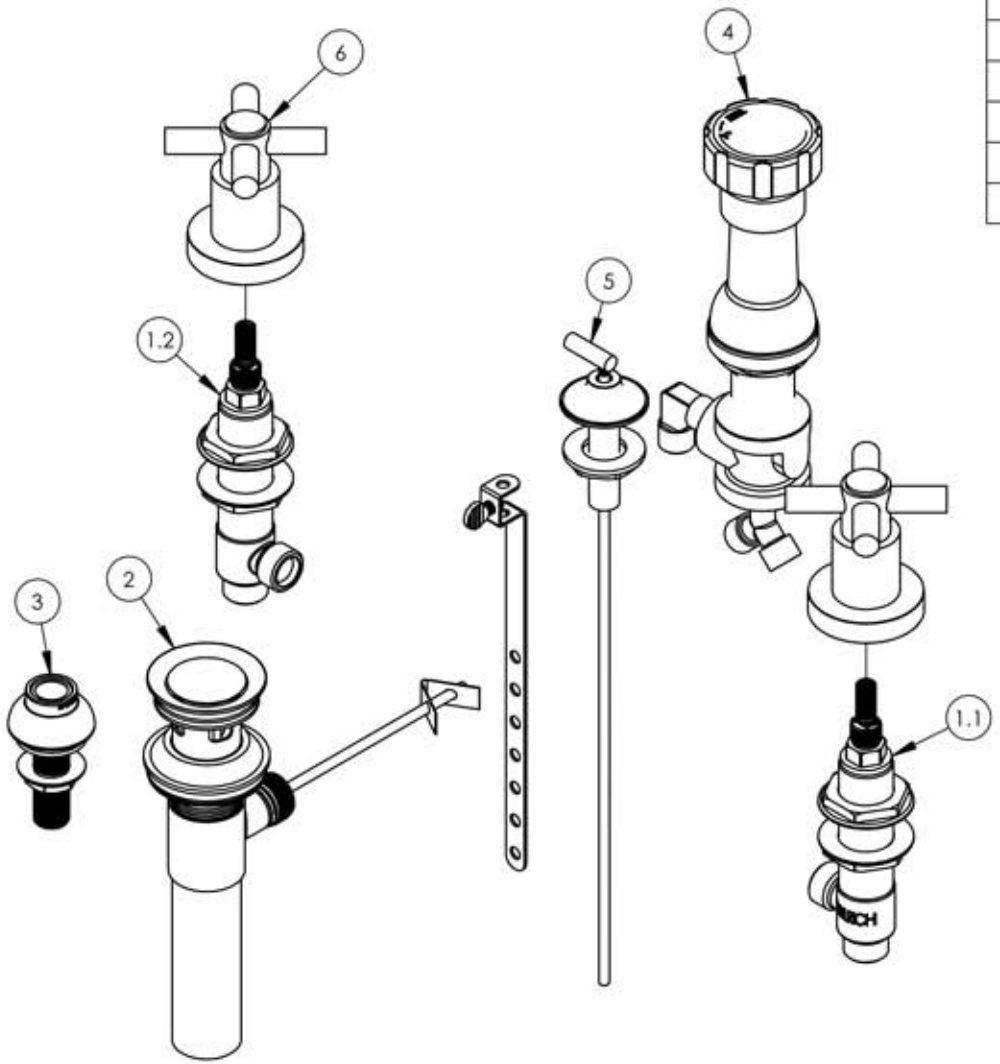

ZONE	REV.	DESCRIPTION	DATE	APPROVED
ALL	A	-DRAWING UPDATED FOR BETTER CLARITY.	5/16/2016	GRE

REVISIONS

1261 LOGAN AVENUE
COSTA MESA, CALIFORNIA 92626

PHONE: 714.361.4800
FAX: 714.617.3120

PHYLRICH®

Defining Luxury Since 1959

PROPRIETARY AND CONFIDENTIAL

THE INFORMATION CONTAINED IN THIS DRAWING IS THE SOLE PROPERTY OF RSS MANUFACTURING. ANY REPRODUCTION IN PART OR AS A WHOLE WITHOUT THE WRITTEN PERMISSION OF RSS MANUFACTURING IS PROHIBITED.

NEXT ASSY	USED ON
-	-
-	-
-	-

APPLICATION

MATERIAL

FINISH

DO NOT SCALE DRAWING

INTERPRET GEOMETRIC DIMENSIONING & TOLERANCING IN ACCORDANCE WITH ASME Y14.5-2009 & ASME Y14.41-2003 STANDARDS. UNLESS OTHERWISE SPECIFIED, DIMENSIONS ARE IN INCHES. TOLERANCES ARE:

FRACTIONS	DECIMALS	ANGULAR
±1/64"	X.X: ±.1 X.XX: ±.01 X.XXX: ±.005	±.5°

	NAME	DATE
DRAWN	LLO	5/16/2016
CHECKED		

FOUR HOLE BIDET SET, BASIC SERIES, TUBULAR CROSS HANDLES

SIZE	ASM/PRT NO.	REV
A	D4134/00	A

SCALE: 1:3.5 | WEIGHT: lbs. | SHEET 1 OF 1